Download Center

Alphacool Rise Flat Reservoir DDC

Alphacool article number: 15075

Quick Info

The Alphacool Rise Flat expansion tank has an integrated pump top for powerful DDC pumps. The combination of pump top and expansion tank is made entirely of acrylic. This makes maintenance and control of the water circuit much easier and gives the expansion tank a unique design. In addition, Alphacool's Rise Flat has 5 individually controllable 5V aRGB LEDs that create unique lighting effects. Thanks to the flat design, the reservoir can fit into even the tightest case.

- Simple maintenance and control of the water cooling system
- Easy filling, draining and venting possible
- Brilliant digital aRGB illumination

Scope of delivery

1x Alphacool Rise AGB Slim DDC, clear
4x screw Plug
2x bracket
2x bracket extended
4x M3x5 screws
4x M4x20 screws
1x Plug tool
1x Digital-RGB adapter
1x stop plug
1x Digital-RGB LED
4x M3x6 screws
4x M4x6 screws
1x Allen key

Technical data

L x W x H	120 x 120 x 50 mm
Pump compatibility	DDC
Capacity	250 ml
Material Pump top	acrylic
Material reservoir	acrylic
Connection	6x G 1/4 internal thread
Maximum working temperature	60 °C
Pressure tested	0.8 bar
Quantity of digital aRGB LEDs	5
Power digital aRGB LEDs	5 V
Power connector digital aRGB LEDs	3-pin JST (male & female switch)
Weight	548 g
Color	clear

Download links

Manual	15075_Alphacool_Rise_Flat_Reservoir_DDC_Manual.pdf
Product pictures	15075_Alphacool_Rise_Flat_Reservoir_DDC_pics.zip
EU-DoC / CE / RoHS	Alphacool_EuDoc_CE_RoHS_15075.pdf

Packaging dimensions per unit

L x W x H	215 x 163 x 55 mm
Weight	926 g

Other data

Certificates	CE, FC, ROHS
EAN	4250197150750
Customs code	84733080000
Guarantee	3 years

Article text

The Alphacool Rise Flat expansion tank has an integrated pump top for powerful DDC pumps. The combination of pump top and expansion tank is made entirely of acrylic. This makes maintenance and control of the water circuit much easier and gives the expansion tank a unique design. In addition, Alphacool's Rise Flat has 5 individually controllable 5V aRGB LEDs that create unique lighting effects. Thanks to the flat design, the reservoir can fit into even the tightest case.

Compact design, flexible use

Due to the flat, compact design and the high number of connections, the Rise Flat reservoir can be used flexibly and can also be installed in the tightest of spaces. With the help of the mounting kit included in the scope of delivery, the reservoir can be mounted free-standing in the case, on a radiator or at free fan positions (see mounting example).

Connection options

The Rise Flat expansion tank has a total of 5 inputs and one output. All connections use a G1/4" thread. The 5 inlets are perfectly placed over the entire expansion tank. This allows for easy filling and draining and facilitates maintenance of the entire water circuit.

Brilliant lighting

On the side of the expansion tank, 5 digitally addressable 5V RGB LEDs can be installed, which create a unique, very noble-looking illumination. The digital aRGB LED lighting is connected via a JST 3-pin connector and can be controlled with a digital RGB controller (e.g. Alphacool Aurora Eiscontrol, Art.15360) or a digital RGB capable mainboard.

Maintenance

The acrylic reservoir allows visual control of the water cooling level. A total of 5 G1/4" inlets allow easy filling, draining and venting of the water circuit.

Compatibility

The Rise Flat AGB has an integrated pump top and is compatible with all original DDC pumps. All screws for mounting the pump on the reservoir are included.

(Note: The pump shown in the installation example is not included in the scope of delivery! The reservoir can only be used in combination with a compatible DDC pump.)

Figure

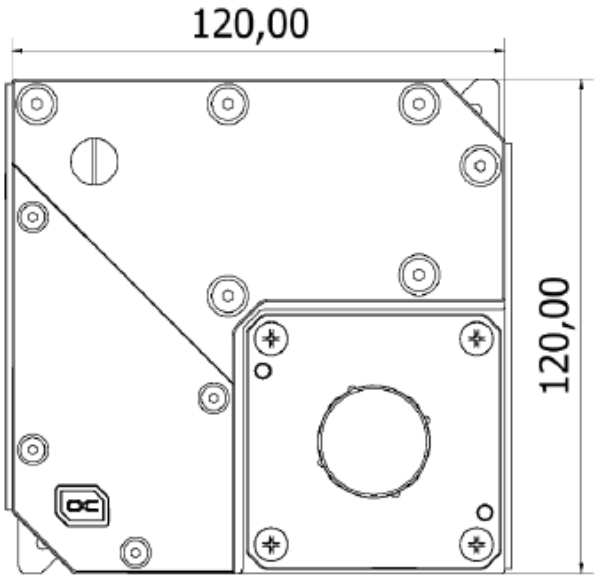
120,00
120,00

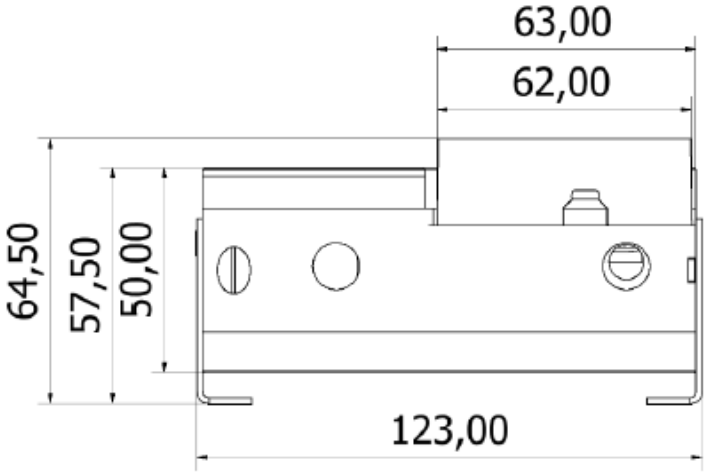
63,00
62,00
64,50
57,50
50,00
123,00

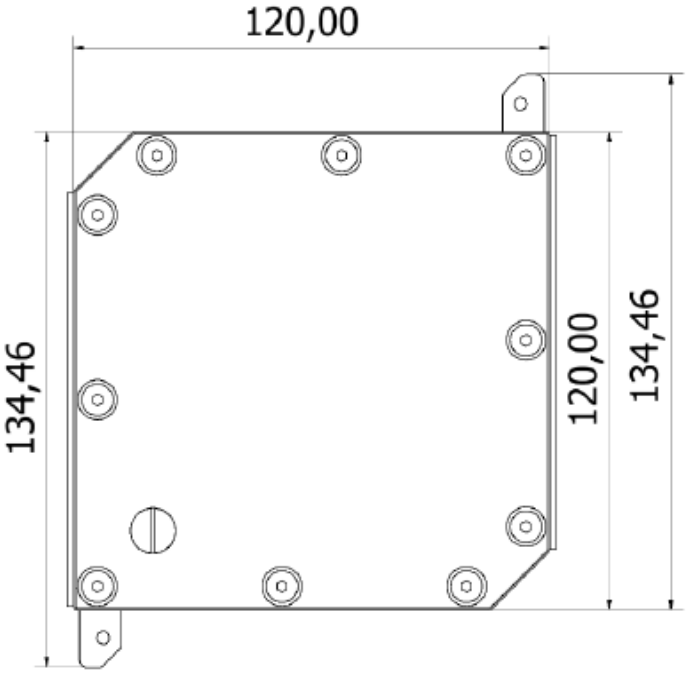
120,00
134,46
120,00
134,46

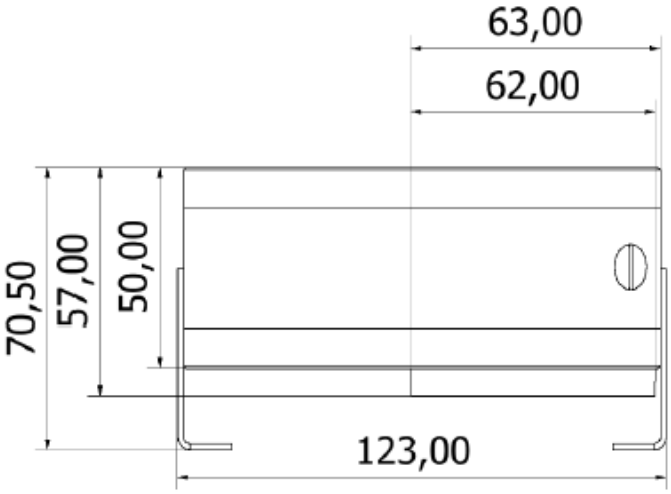
63,00
62,00
70,50
57,00
50,00
123,00