Download Center

Alphacool Apex Skeleton Carbon Case

Alphacool article number: 14593

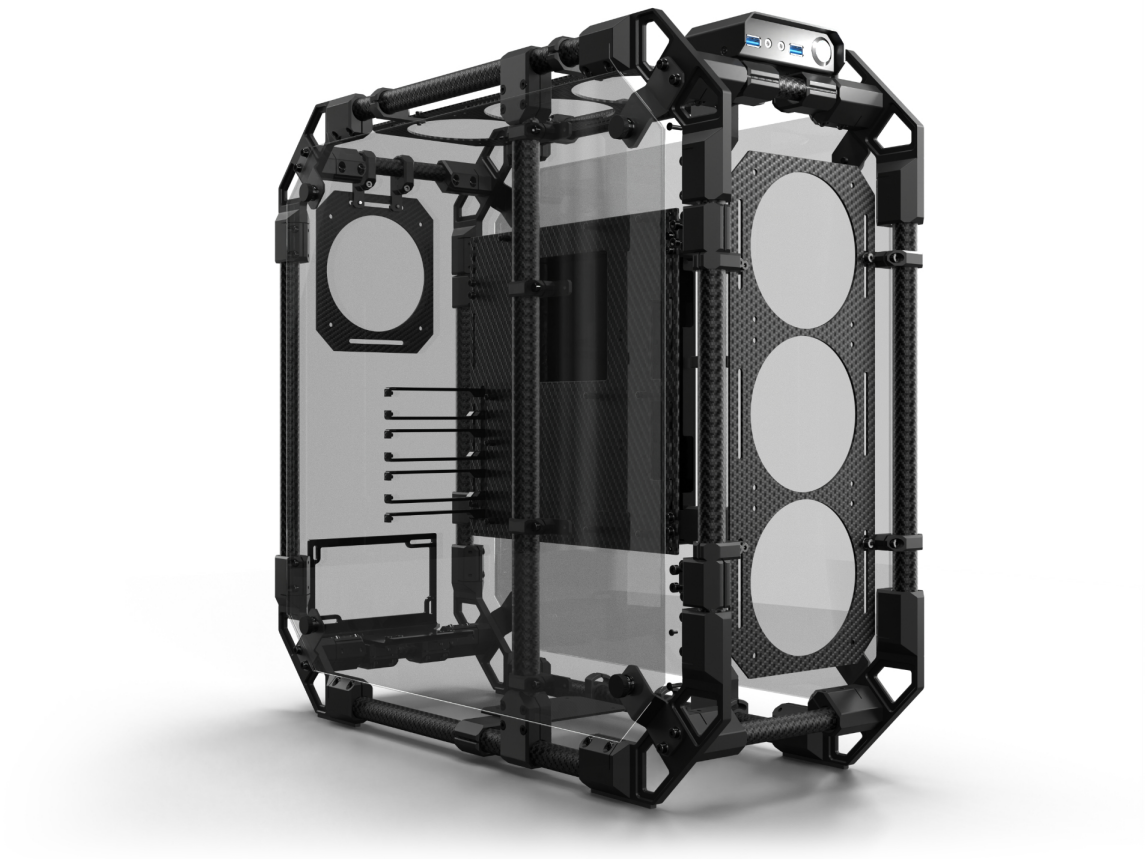

Quick Info

Unlimited freedom with the Alphacool Apex Skeleton. Made from carbon rods and CNC-milled aluminum connectors, this case was specially developed to meet the requirements of water cooling systems. In this version, it is delivered without a distro plate, pump and vertical GPU holder. This provides additional scope for creativity. The skeleton can still be completely dismantled and can be adapted to suit your personal requirements.

- Real carbon fiber
- Can be completely disassembled
- Optimized for water cooling
- Smoked glass side panel

Scope of delivery

1x Skeleton Case
17x 6 - 32 UNC Screw
7x M4x12mm Screw
1x Support Bracket
7x PCIe IO Bracket
6x G1/4 Plug
1x Plug tool
1x ARGB Adapter
5x Cable ties

Technical data

Dimensions (L x W x H)	607.50 x 259.80 x 573.00 mm
Weight	11kg
Material	Carbon, aluminum, smoked glass
Mainboard support	ATX, mATX, EATX, ITX
GPU bracket	Horizontal: 2+ Slot
PCIe slots	7
Drive mount	1x 2,5" SSD
Power supply bracket	ATX Standard
Radiator front/top support	120, 240, 360mm
Radiator rear support	120mm
Frontpanel USB	2x 3.0 Type A
Frontpanel Audio	1x audio output | 1x microphone input
PCI Express Riser	4.0 x16
Color	carbon, black

Download links

Manuals	14593_Alphacool_Apex_Skeleton_Carbon_Case_Manual(1).pdf 14593_Alphacool_Apex_Skeleton_Carbon_Case_Manual(2).pdf
Product pictures	14593_Alphacool_Apex_Skeleton_Carbon_Case_pics.zip
EU-DoC / CE / RoHS	Alphacool_EuDoc_CE_RoHS_14593.pdf

Packaging dimensions per unit

L x W x H	700 x 300 x 650 mm
Weight	11500 g

Other data

Certificates	CE, FC, RoHS
EAN	4250197145930
Customs code	84733080000

Article text

Unlimited freedom with the Alphacool Apex Skeleton. Made from carbon rods and CNC-milled aluminum connectors, this case was specially developed to meet the requirements of water cooling systems. In this version, it is delivered without a distro plate, pump and vertical GPU holder. This provides additional scope for creativity. The Skeleton can still be completely dismantled and can be adapted to suit your personal requirements.

A new level of creativity

The Alphacool Apex Skeleton Carbon case is characterized by a design in which all components are screw-mounted, which allows for extensive modifiability. Equipped with three radiator mounts, two for 360mm and one for 120mm, this case offers ideal conditions for high-performance cooling systems. The mainboard tray including cable box can also be positioned flexibly. The smoked glass side panel is another feature that opens up additional design options, as is the freely selectable positioning of the front panel. All in all, the skeleton case allows a great deal of freedom and creative ideas.

Apex Design

The Apex product line from Alphacool represents the highest level of perfection. First-class materials and innovative technologies guarantee a unique premium product. Consisting of real carbon and modular, CNC-milled aluminum connectors, the Apex Skeleton case offers limitless creativity with a unique look. Inside each Skeleton case resides a truly unique creation waiting to be unleashed.

Figure (1)

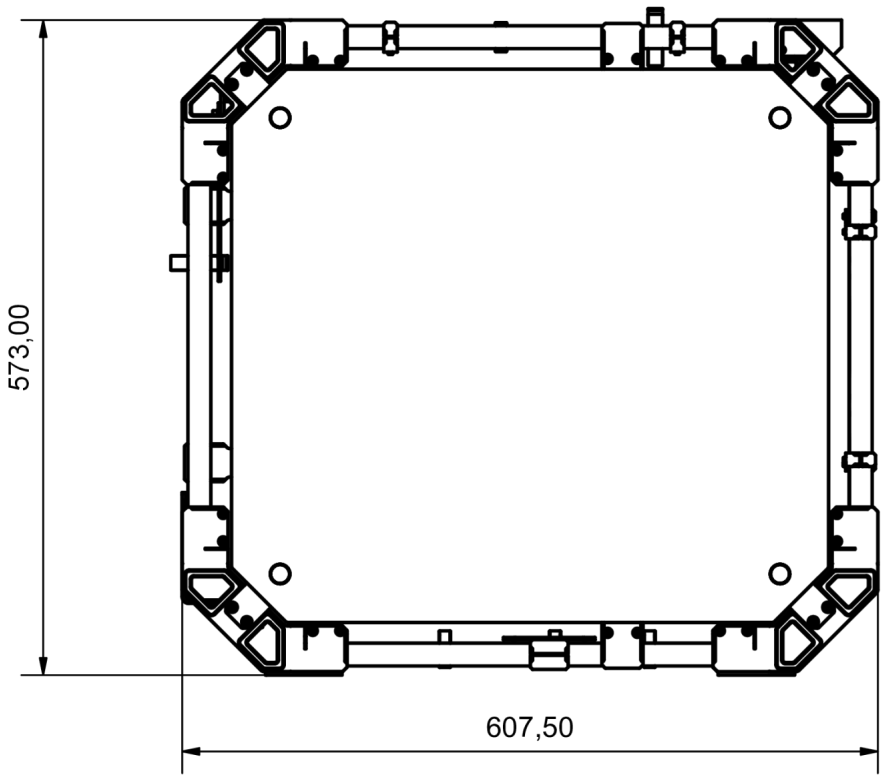

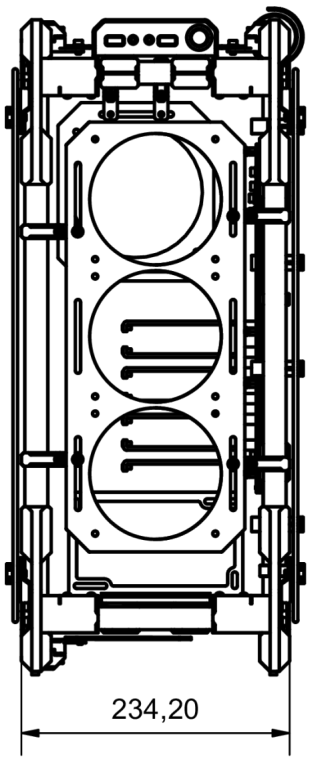

General tolerance: ± 0,25mm
Dimension in millimeter

Figure (2)

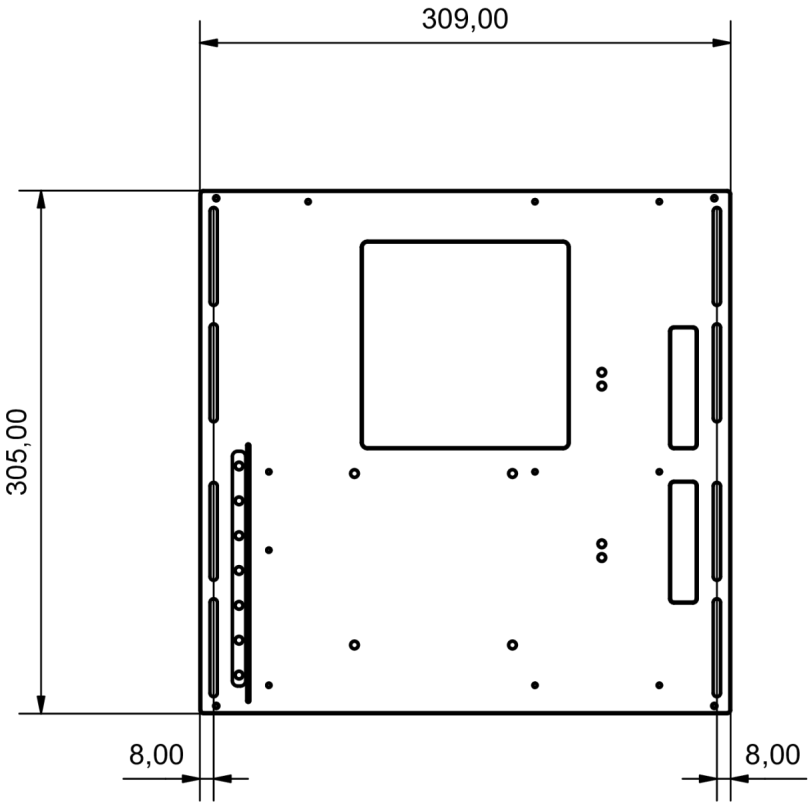

General tolerance: ± 0,25mm
Dimension in millimeter

Figure (3)

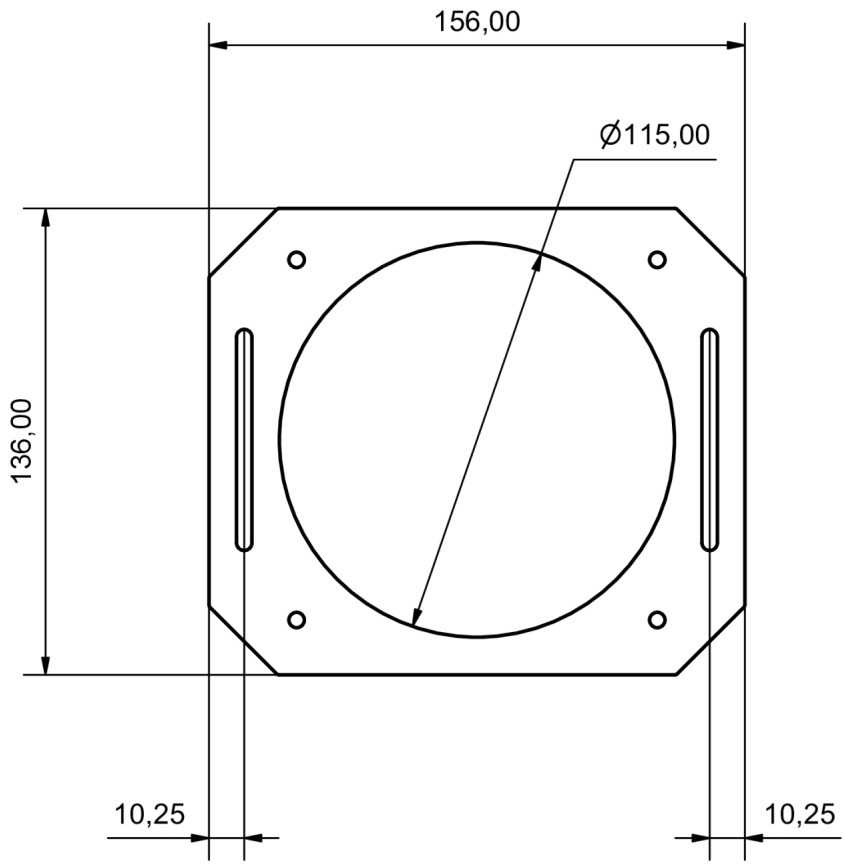

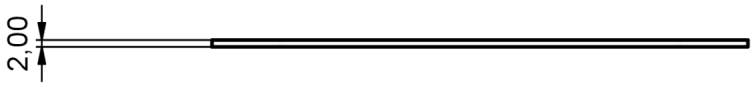

General tolerance: ± 0,25mm
Dimension in millimeter

Figure (4)

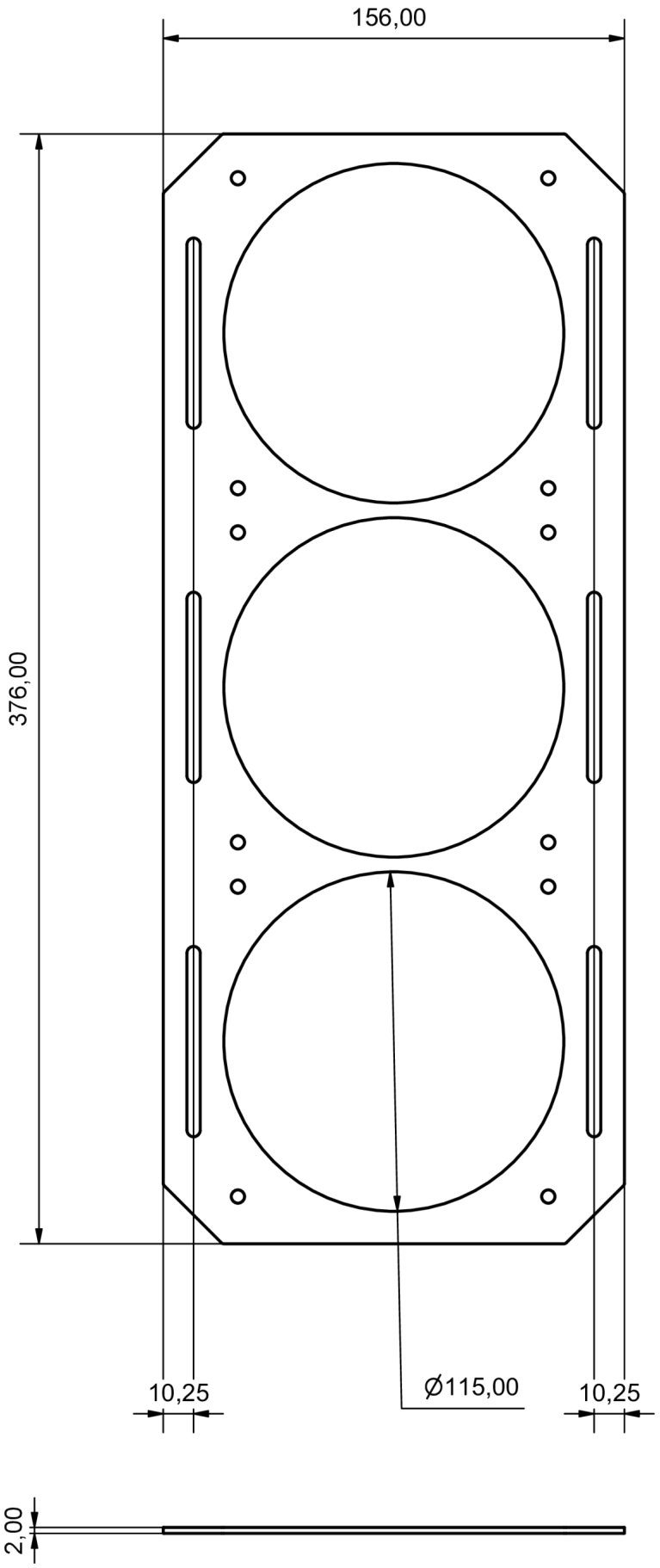

General tolerance: ± 0,25mm
Dimension in millimeter