Download Center

Alphacool NexXxoS HPE-45 Full Copper 480mm Radiator

Alphacool article number: 14473

Quick Info

For more than a decade, Alphacool has dominated the market with the NexXxoS Full Copper radiator series. Our extensive portfolio of radiator variants is unique in the world. Just like our manufacturing process, which allows us to produce all water-carrying parts and the cooling fins out of pure copper. As a result, the NexXxoS series offers the highest thermal conductivity of any radiator on the market. Thanks to their exceptional performance, the radiators can easily dissipate even extremely high waste heat and have become essential in many areas of the cooling industry.

- 1.2x increased water throughput compared to NexXxos standard
- 20% more efficient heat transfer compared to NexXxos standard
- 100% of the internal structure is made of copper

Scope of delivery

1x Alphacool NexXxoS HPE-45 Full Copper 480mm Radiator, black
16x M3x5 case mounting screws
16x M3x30 fan screws
1x Allen key
1x plug tool

Technical data radiator

L x W x H	511.5 x 124 x 45 mm (±3 %)
Quantity of cooling channels	28
Material cooling fins, pre-chambers & channels	copper
Material threads	brass
Material outer housing	stainless steel
Threads	4x G 1/4 IN/OUT & 1x Fill-/Drainport G 1/4 (max. 5 mm thread length)
Possible fan size	120 mm
Possible fan assembly	4x one-sided / 8x both-sided
Thread size fan mounting	M3
Pressure tested	0.8 bar
Maximum working temperature	60 °C
Fin density	16 FPI
Weight	1535 g
Color	black

Download links

Product pictures	14473_Alphacool_NexXxoS_HPE-45_Full_Copper_480mm_Radiator_pics.zip
EU-DoC / CE / RoHS	Alphacool_EuDoc_CE_RoHS_14473.pdf

Packaging dimensions per unit

L x W x H	580 x 135 x 55 mm
Weight	1846 g

Other data

Certificates	CE, FC, ROHS
EAN	4250197144735
Customs code	84195080900
Guarantee	10 years

Article text

For more than a decade, Alphacool has dominated the market with the NexXxoS Full Copper radiator series. Our extensive portfolio of radiator variants is unique in the world. Just like our manufacturing process, which allows us to produce all water-carrying parts and the cooling fins out of pure copper. As a result, the NexXxoS series offers the highest thermal conductivity of any radiator on the market. Thanks to their exceptional performance, the radiators can easily dissipate even extremely high waste heat and have become essential in many areas of the cooling industry.

The next step in evolution: NexXxoS HPE Full Copper Radiator!

The NexXxos Full Copper HPE Radiator uses the same materials as previous NexXxos models, but takes it a step further technically. Due to the condensed internal structure, the number of water channels and copper fins could be increased. Thus, a larger volume of water is in direct contact with the cooling fins and the heat transfer is enormously improved. The higher number of fin rows and their shortening also makes much more efficient use of the cooling surface. Comparison tests* with the conventional NexXxos radiator have shown that a performance increase of 4.5K is possible when using the HPE radiator. At higher ambient temperatures and higher fan speeds, the performance gap with the normal NexXxoS radiators even increases progressively, reaching a possible performance increase of up to 6K.

(* Test setup: NexXxos ST30 360mm radiator vs. NexXxos HPE-30 360mm radiator with Eisbaer cooler and 3x 120mm Rise Aurora fans and on Asus Prime x299 motherboard with Intel i9 10900x CPU with 350W waste heat)

Connection options & mounting

The NexXxoS HPE radiator has two IN or OUT connections with G1/4" threads in the pre-chamber area. On the opposite side is a fill or drain port, which can be used for filling and draining the water circuit. All screws for mounting in the case and for mounting the fans are included with the radiator. Additional screws are not usually required.

Safety first

The NexXxoS HPE radiator has special protective plates placed under all mounting holes to prevent the screws from being screwed in too deeply. This protects the cooling fins and water channels underneath from damage.

Patented screw plugs

All NexXxoS HPE radiators use Alphacool's patented screw plugs. Protruding screw plugs often mean that the radiator cannot be laid flush. Alphacool's screw plugs are fully recessed into the radiator, flush with its surface and allow easy installation in the case.

Figure

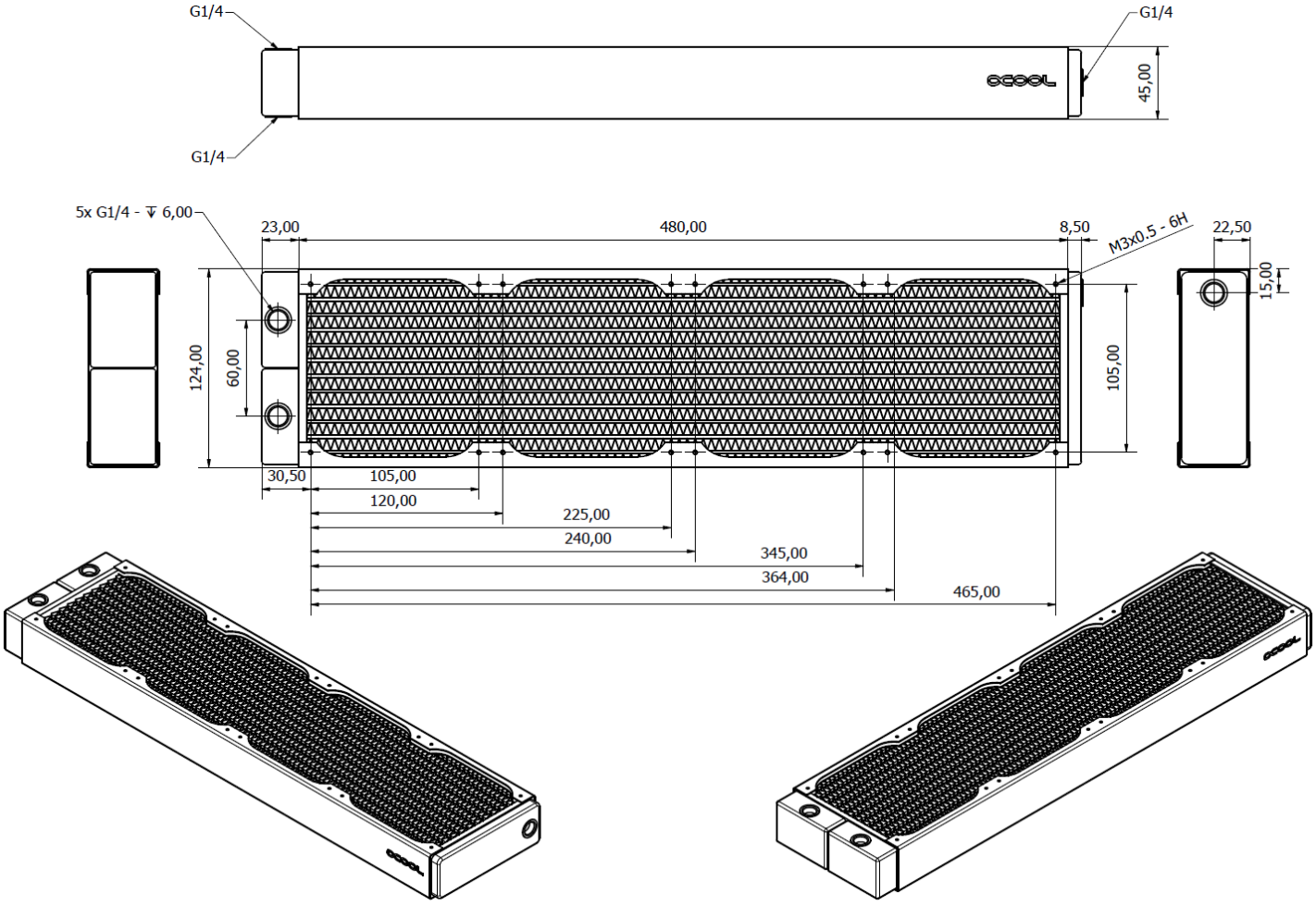
G1/4
G1/4
G1/4
45,00
5x G1/4 - ↧ 6,00
23,00
480,00
8,50
M3x0.5 - 6H
22,50
15,00
124,00
60,00
105,00
30,50
105,00
120,00
225,00
240,00
345,00
364,00
465,00