V. 1.013 // 10.2026

Download Center

# Alphacool NexXxoS HPE-20 Full Copper 360mm Radiator

Alphacool article number: 14437

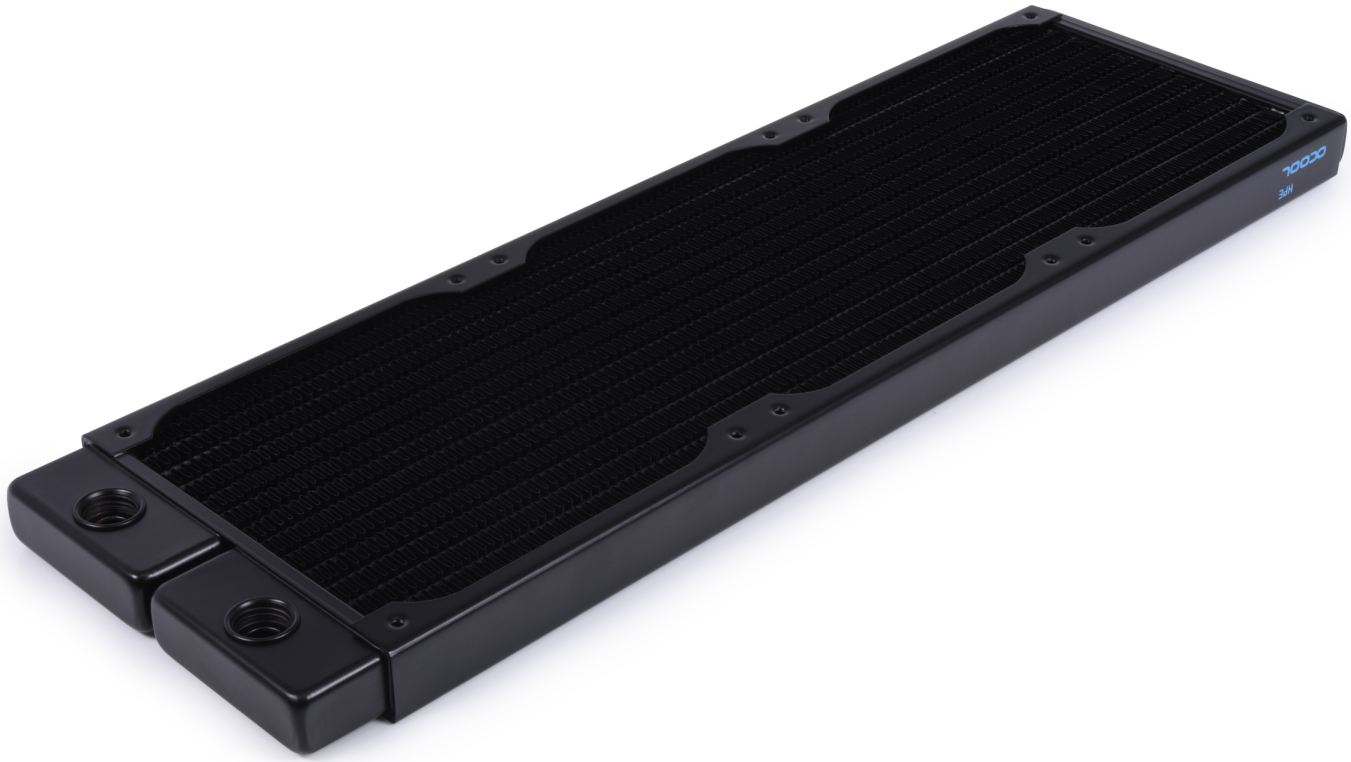

## Quick Info

For more than a decade, Alphacool has dominated the market with the NexXxoS Full Copper radiator series. Our extensive portfolio of radiator variants is unique in the world. Just like our manufacturing process, which allows us to produce all water-carrying parts and the cooling fins out of pure copper. As a result, the NexXxoS series offers the highest thermal conductivity of any radiator on the market. Thanks to their exceptional performance, the radiators can easily dissipate even extremely high waste heat and have become essential in many areas of the cooling industry.

- 1.2x increased water throughput compared to NexXxos standard
- 20% more efficient heat transfer compared to NexXxos standard
- 100% of the internal structure is made of copper

## Scope of delivery

1x Alphacool NexXxoS ST20 HPE Full Copper 360mm Radiator, black
12x M3x5 case mounting screws
12x M3x30 fan screws
1x Allen key
1x plug tool

## Technical data radiator

| | |
|---|---|
| L x W x H | 390 x 120 x 20 mm |
| Quantity of cooling channels | 14 |
| Material cooling fins, pre-chambers & channels | copper |
| Material threads | brass |
| Material outer housing | stainless steel |
| Threads | 2x G 1/4 IN/OUT (max. 5 mm thread length) |
| Possible fan size | 120 mm |
| Possible fan assembly | 3x one-sided / 6x both-sided |
| Thread size fan mounting | M3 |
| Pressure tested | 0.8 bar |
| Maximum working temperature | 60 °C |
| Fin density | 19 FPI |
| Weight | 610 g |
| Color | black |

## Download links

| | |
|---|---|
| Product pictures | 14437_Alphacool_NexXxoS_HPE-20_Full_Copper_360mm_Radiator_pics.zip |
| EU-DoC / CE / RoHS | Alphacool_EuDoc_CE_RoHS_14437.pdf |

## Packaging dimensions per unit

| | |
|---|---|
| L x W x H | 460 x 140 x 40 mm |
| Weight | 791 g |

## Other data

| | |
|---|---|
| Certificates | CE, FC, ROHS |
| EAN | 4250197144377 |
| Customs code | 84195080900 |
| Guarantee | 10 years |

# Article text

For more than a decade, Alphacool has dominated the market with the NexXxoS Full Copper radiator series. Our extensive portfolio of radiator variants is unique in the world. Just like our manufacturing process, which allows us to produce all water-carrying parts and the cooling fins out of pure copper. As a result, the NexXxoS series offers the highest thermal conductivity of any radiator on the market. Thanks to their exceptional performance, the radiators can easily dissipate even extremely high waste heat and have become essential in many areas of the cooling industry.

**The next step in evolution: NexXxoS HPE Full Copper Radiator!**

The NexXxos Full Copper HPE Radiator uses the same materials as previous NexXxos models, but takes it a step further technically. Due to the condensed internal structure, the number of water channels and copper fins could be increased. Thus, a larger volume of water is in direct contact with the cooling fins and the heat transfer is enormously improved. The higher number of fin rows and their shortening also makes much more efficient use of the cooling surface. Comparison tests with the conventional NexXxos radiator have shown that a performance increase of 4.5K is possible when using the HPE radiator. At higher ambient temperatures and higher fan speeds, the performance gap with the normal NexXxoS radiators even increases progressively, reaching a possible performance increase of up to 6K.

**Space-saving & flexible to use**

The compact slim radiators can be mounted very flexibly in even the tightest cases thanks to their low overall height of only 20mm.

**Connection options & mounting**

The NexXxoS HPE radiator has one IN and OUT connection with G1/4" threads in the pre-chamber area. All screws for mounting in the case and for mounting the fans are included with the radiator. Additional screws are not usually required.

# Figure

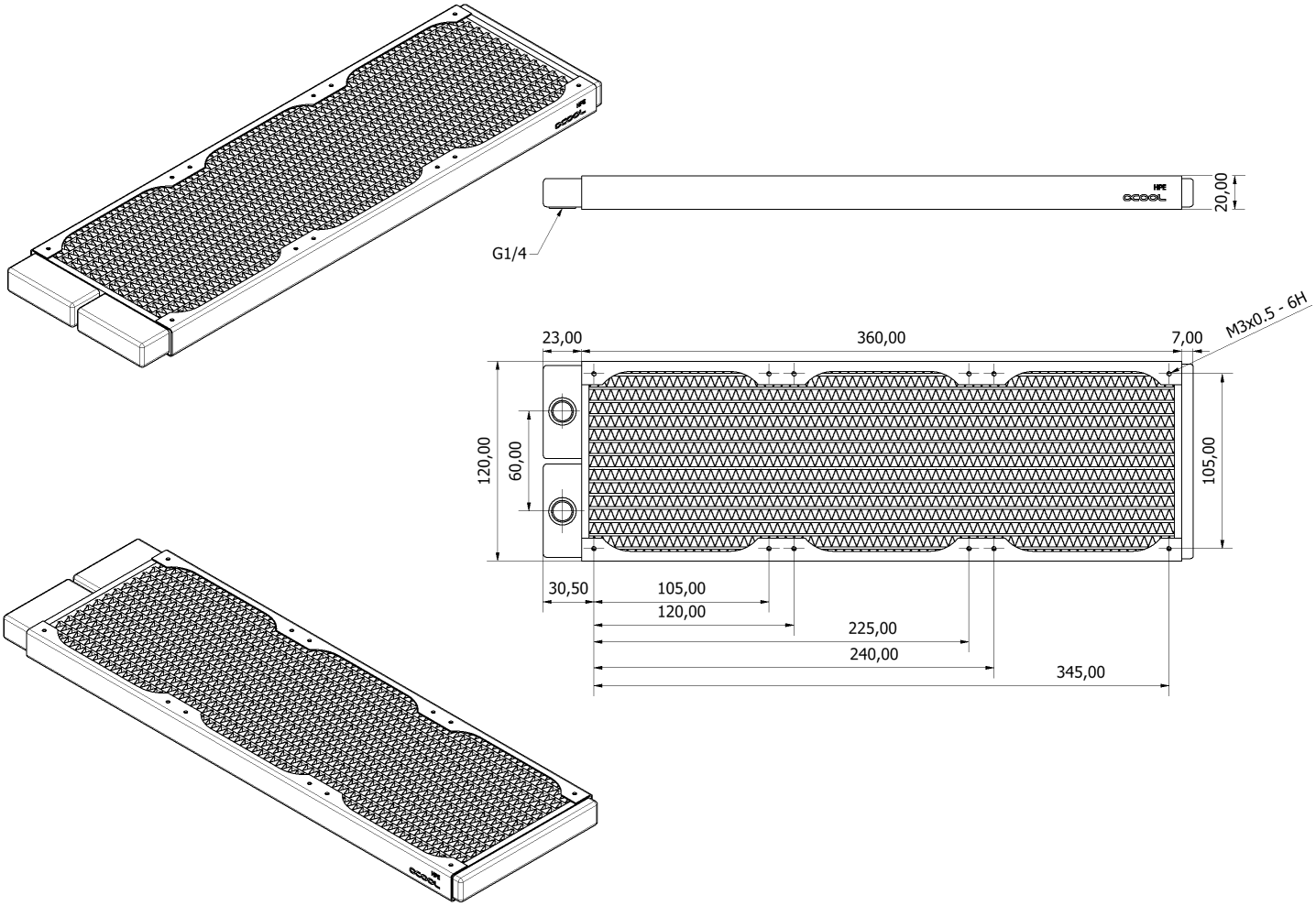
G1/4
20,00
23,00
360,00
7,00
M3x0.5 - 6H
120,00
60,00
105,00
30,50
105,00
120,00
225,00
240,00
345,00