V. 1.012 // 10.2026

Download Center

Alphacool NexXxoS HPE-20 Full Copper 120mm Radiator

Alphacool article number: 14435

Quick Info

For more than a decade, Alphacool has dominated the market with the NexXxoS Full Copper radiator series. Our extensive portfolio of radiator variants is unique in the world. Just like our manufacturing process, which allows us to produce all water-carrying parts and the cooling fins out of pure copper. As a result, the NexXxoS series offers the highest thermal conductivity of any radiator on the market. Thanks to their exceptional performance, the radiators can easily dissipate even extremely high waste heat and have become essential in many areas of the cooling industry.

- 1.2x increased water throughput compared to NexXxos standard
- 20% more efficient heat transfer compared to NexXxos standard
- 100% of the internal structure is made of copper

Scope of delivery

1x Alphacool NexXxoS ST20 HPE Full Copper 120mm Radiator, black
4x M3x5 case mounting screws
4x M3x30 fan screws
1x Allen key
1x plug tool

Technical data radiator

L x W x H	150 x 120 x 20 mm
Quantity of cooling channels	14
Material cooling fins, pre-chambers & channels	copper
Material threads	brass
Material outer housing	stainless steel
Threads	2x G 1/4 IN/OUT (max. 5 mm thread length)
Possible fan size	120 mm
Possible fan assembly	1x one-sided / 2x both-sided
Thread size fan mounting	M3
Pressure tested	0.8 bar
Maximum working temperature	60 °C
Fin density	19 FPI
Weight	290 g
Color	black

Download links

Product pictures	14435_Alphacool_NexXxoS_HPE-20_Full_Copper_120mm_Radiator_pics.zip
EU-DoC / CE / RoHS	Alphacool_EuDoc_CE_RoHS_14435.pdf

Packaging dimensions per unit

L x W x H	220 x 140 x 40 mm
Weight	398 g

Other data

Certificates	CE, FC, ROHS
EAN	4250197144353
Customs code	84195080900
Guarantee	10 years

Article text

For more than a decade, Alphacool has dominated the market with the NexXxoS Full Copper radiator series. Our extensive portfolio of radiator variants is unique in the world. Just like our manufacturing process, which allows us to produce all water-carrying parts and the cooling fins out of pure copper. As a result, the NexXxoS series offers the highest thermal conductivity of any radiator on the market. Thanks to their exceptional performance, the radiators can easily dissipate even extremely high waste heat and have become essential in many areas of the cooling industry.

The next step in evolution: NexXxoS HPE Full Copper Radiator!

The NexXxos Full Copper HPE Radiator uses the same materials as previous NexXxos models, but takes it a step further technically. Due to the condensed internal structure, the number of water channels and copper fins could be increased. Thus, a larger volume of water is in direct contact with the cooling fins and the heat transfer is enormously improved. The higher number of fin rows and their shortening also makes much more efficient use of the cooling surface. Comparison tests with the conventional NexXxos radiator have shown that a performance increase of 4.5K is possible when using the HPE radiator. At higher ambient temperatures and higher fan speeds, the performance gap with the normal NexXxoS radiators even increases progressively, reaching a possible performance increase of up to 6K.

Space-saving & flexible to use

The compact slim radiators can be mounted very flexibly in even the tightest cases thanks to their low overall height of only 20mm.

Connection options & mounting

The NexXxoS HPE radiator has one IN and OUT connection with G1/4" threads in the pre-chamber area. All screws for mounting in the case and for mounting the fans are included with the radiator. Additional screws are not usually required.

Figure

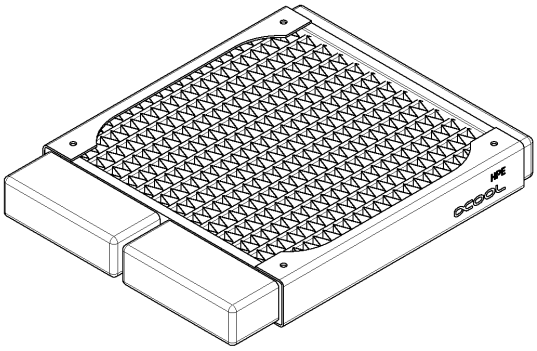

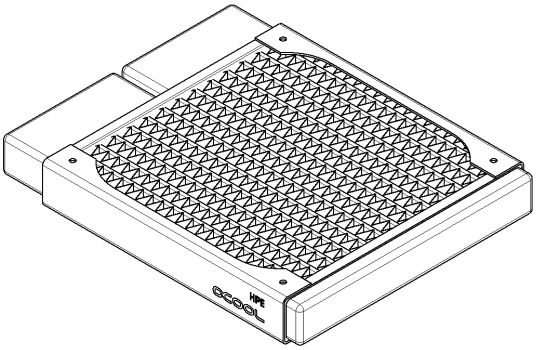

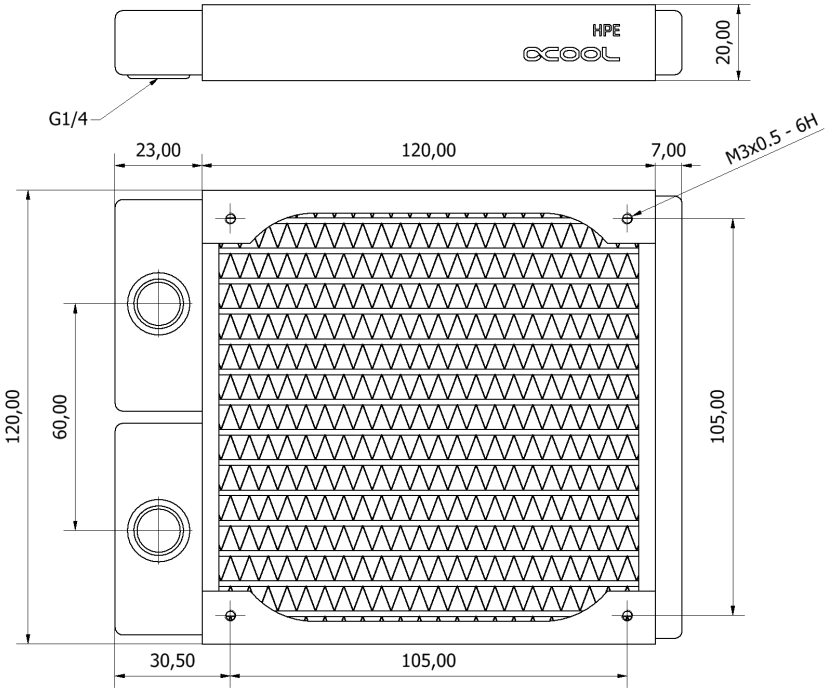
HPE
20,00
G1/4
23,00
120,00
7,00
M3x0.5 - 6H
120,00
60,00
105,00
30,50
105,00