V. 1.006 // 09.2026

Download Center

Alphacool Apex Stealth Metal fan 2000rpm gold (120x120x25mm)

Alphacool article number: 13854

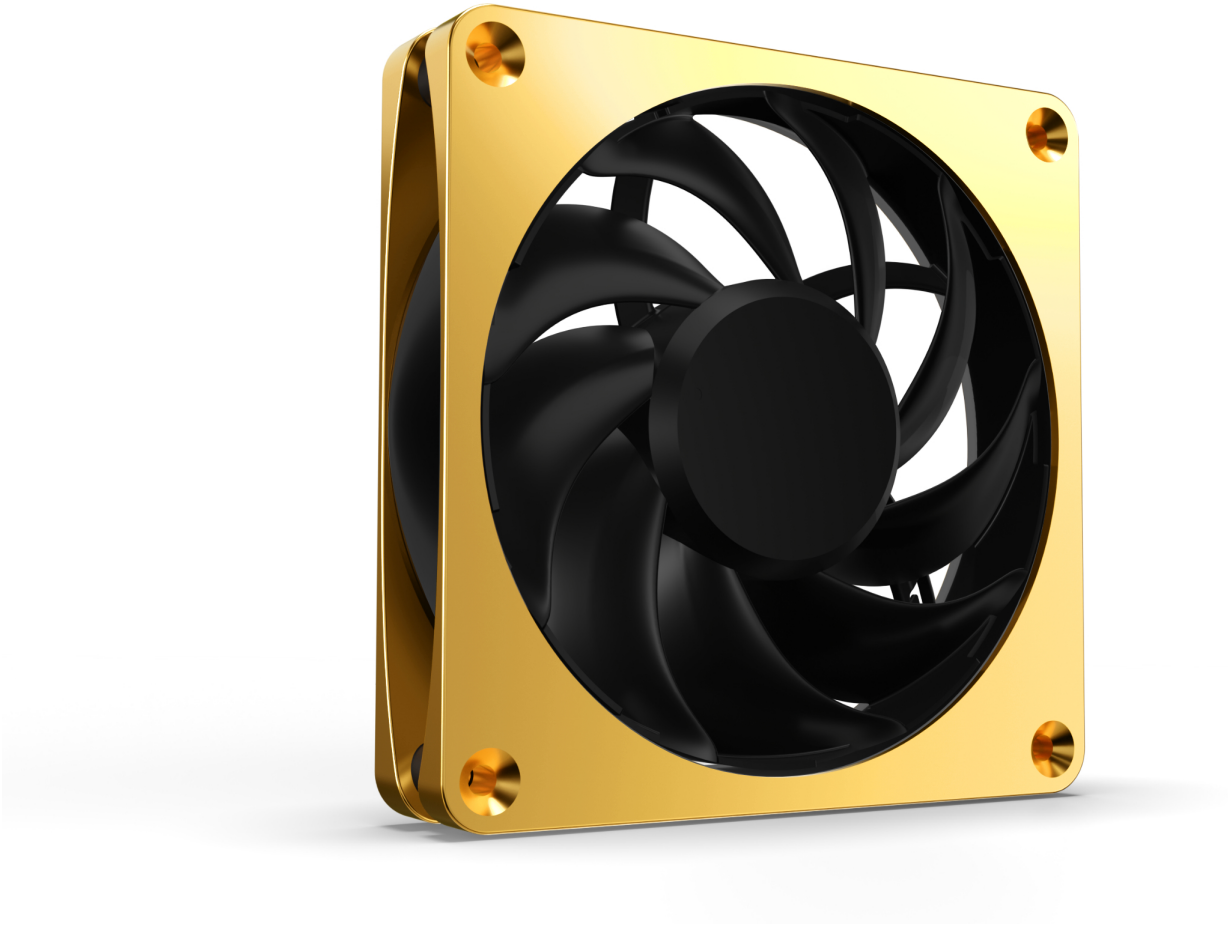

Quick Info

High-quality, elegant as well as timeless design and technical innovation - these are the features of the Alphacool Apex Stealth metal fan. With its patent-pending decoupling technology, the robust metal frame and a special rotor, this fan certainly impresses. Not only is the Apex Stealth one of the most powerful fans, but it also remains the quietest at any speed.

- High performance and whisper quiet
- Patent pending decoupling technology
- Frame made of high quality metal
- Suitable for cases as well as radiators
- Controllable via PWM + Zero-RPM Control

Scope of delivery

1x Stealth Fan
1x PWM Extension cable 50cm
4x M3 Screw
4x 6-32 UNC Screw
4x M4 Screw
4x Stealth Mounting Nut
1x cleaning cloth

Technical data

Dimensions (L x W x H)	120 x 120 x 25,5mm
Material (Frame)	Die-cast zinc
Material (Impeller)	Plastic
Weight	320g
Speed	400~2000±10% rpm
Bearing	Hydro Dynamic Bearing
Connection	4-Pin PWM
Cable length PWM	40±8 mm (+ 50cm extension cable)
Cable length (daisy chain)	110±10 mm
Start-up Voltage	6 V DC
Rated Volt	12 V DC
Power Consumption	2.64 Watt
Rated Current	0.20 A (0.22Max)
Air Flow	47 CFM
Static Air Pressure	2.09 mmH_2O
Noise Level	24.6 dBA
MTBF	100,000h
PWM control	Yes
Zero RPM control	Yes
Tacho Signal	Yes
Auto-restart	Yes
Color	gold

Download links

Manual	13854_Alphacool_Apex_Stealth_Metal_fan_2000rpm_gold_(120x120x25mm)_Manual.pdf
Product pictures	13854_Alphacool_Apex_Stealth_Metal_fan_2000rpm_gold_(120x120x25mm)_pics.zip
EU-DoC / CE / RoHS	Alphacool_EuDoc_CE_RoHS_13854.pdf

Packaging dimensions per unit

L x W x H	180 x 170 x 33 mm
Weight	400 g

Other data

Certificates	CE, FC, RoHS
EAN	4250197138543
Customs code	84145915000
Guarantee	5 years

Article text

High-quality, elegant as well as timeless design and technical innovation - these are the features of the Alphacool Apex Stealth metal fan. With its patent-pending decoupling technology, the robust metal frame and a special rotor, this fan certainly impresses. Not only is the Apex Stealth one of the most powerful fans, but it also remains the quietest at any speed.

Whisper Quiet

The fan blades, motor and its suspension are completely decoupled from the metal frame. For this purpose, a special damping system was placed between the metal frame and the fan, which absorbs all vibrations. This type of decoupling is a completely new system, which is brought to the market by Alphacool for the first time with the Apex fan. In addition, the impeller is equipped with a closed frame that prevents the impeller tips from fluttering at high speed, which also has a positive effect on the fan's characteristics.

Powerful All-rounder

The Alphacool Apex Stealth metal fan is a true all-rounder. It sets new standards in terms of airflow and static pressure. Therefore, this fan is not only perfect for mounting on radiators, but also provides excellent airflow as a case fan. The Apex Stealth can be controlled between 400 to 2000 rpm via the 4-pin PWM connector. The startup speed is ~420 rpm. In addition, the Stealth offers Zero RPM control, which can be used to bring the fan to a complete stop.

Apex Design

Alphacool's Apex product line represents the highest level of perfection. First-class materials and innovative technologies guarantee a unique premium product. Consisting of high-quality metal, the curved frame gives the Apex Stealth its distinctive design and fits perfectly into any PC build.

Additional Features

As usual with Alphacool, multiple fans can be effortlessly connected in series via daisy chain. The cables can be hidden in the corners of the fan so that they are no longer visible. A 50 cm PWM cable is also included as an extension. The 6-pole motor in combination with the HDB bearing (Hydro Dynamic Bearing) ensures extremely quiet operation and high durability.

Figure

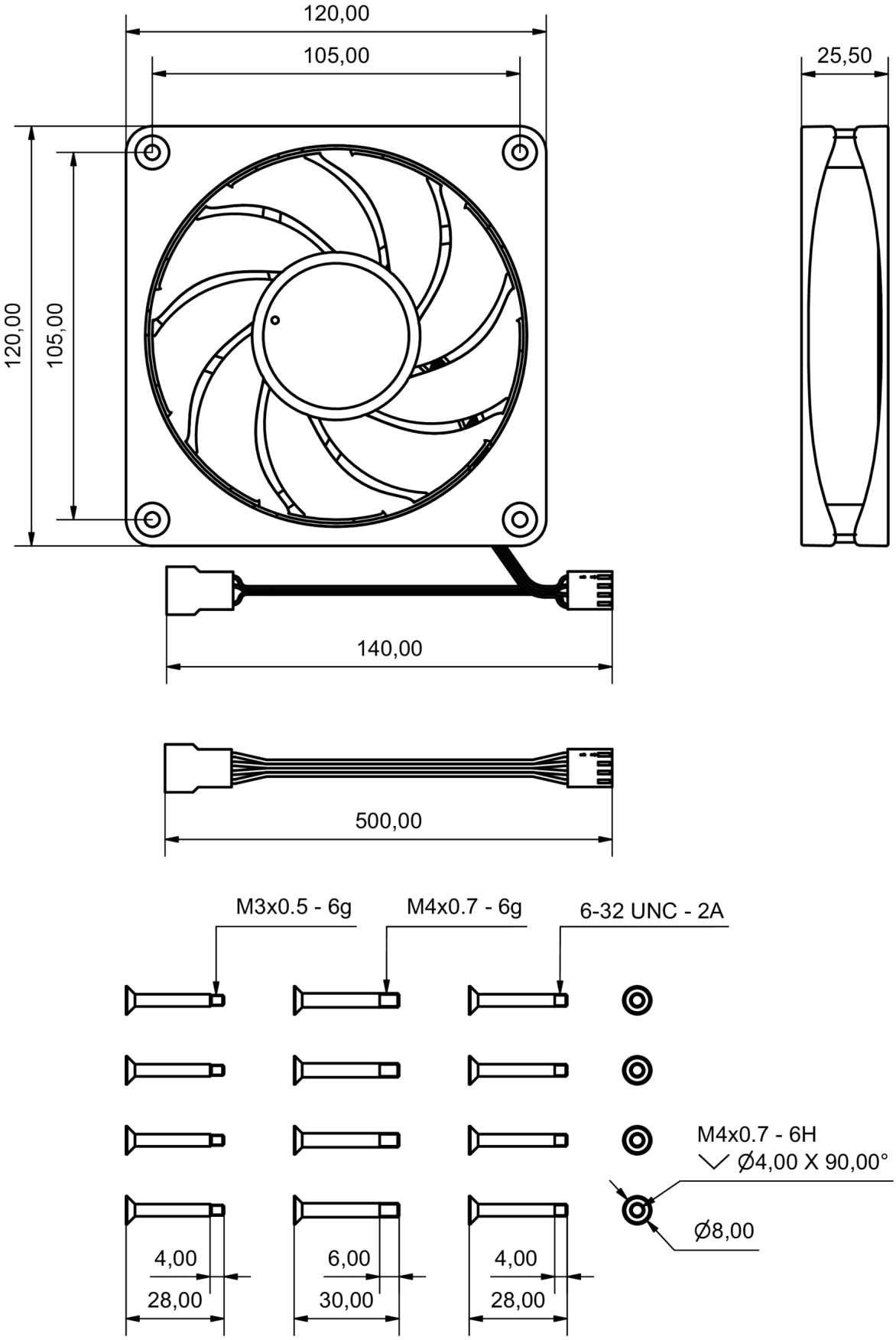

General tolerance: ± 0,25mm
Dimension in millimeter