Download Center

Alphacool Apex Pro Skeleton Carbon Case

Alphacool article number: 13758

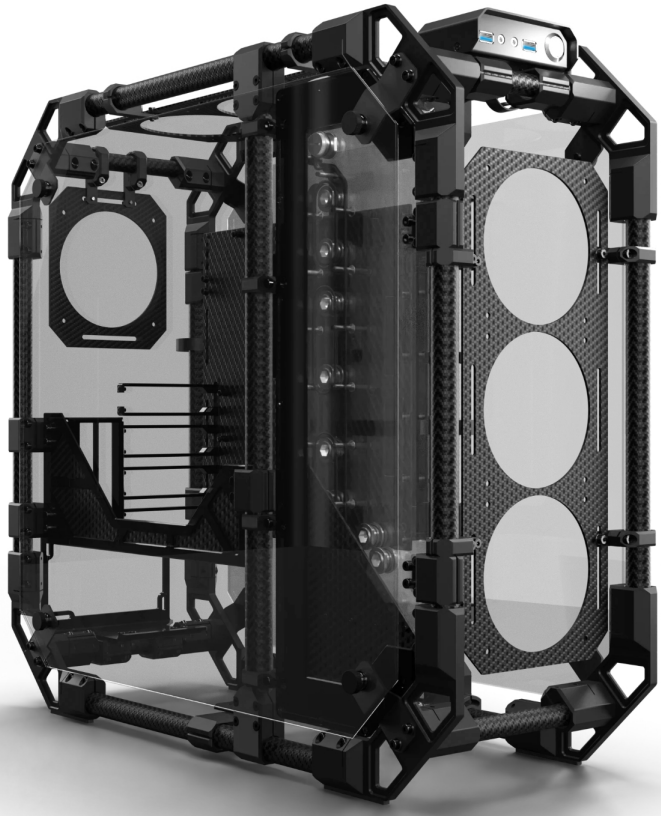

Quick Info

Unlimited freedom with the Alphacool Apex Pro Skeleton. Made from carbon rods and CNC-milled aluminum connectors, this case was specially developed to meet the requirements of water cooling systems. In order not to limit creativity, the Skeleton can be completely disassembled and customized according to your own wishes. The supplied Distro Plate including pre-assembled VPP Apex pump is designed exclusively for this case and enables numerous connection options.

- Real carbon fiber
- Can be completely disassembled
- Optimized for water cooling
- Including special Skeleton Distro Plate
- Smoked glass side panel

Scope of delivery

1x Skeleton Case
17x 6 - 32 UNC Screw
1x Vertical GPU Mount + PCIe Riser Cable
7x M4x12mm Screw
1x Support Bracket
7x PCIe IO Bracket
1x Distro Plate
6x G1/4 Plug
1x Plug tool
1x ARGB Adapter
5x Cable ties

Technical data

Dimensions (L x W x H)	607.50 x 259.80 x 573.00 mm
Weight	13kg
Material	Carbon, aluminum, smoked glass
Mainboard support	ATX, mATX, EATX, ITX
PCIe slots (without vertical GPU mount)	7
GPU bracket	Vertical: 2 Slot | Horizontal: 2+ Slot
PCI Express Riser	4.0 x16
Drive mount	1x 2.5" SSD
Power supply bracket	ATX Standard
Radiator front/top support	120, 240, 360mm
Radiator rear support	120mm
Frontpanel USB	2x 3.0 Type A
Frontpanel Audio	1x audio output | 1x microphone input
Color	carbon, black

Technical data Distro Plate

Dimensions (L x W x H)	155.00 x 63.50 x 486.00 mm
Material	Acrylic
Volume	approx. 750ml
Pump compatibility	VPP/D5
Threads	9x G1/4" + 2x Fillport and 1x Drainport
Maximum working temperature	60 °C
Pressure tested	0.8 bar
Quantity digital aRGB LEDs	15
Power digital aRGB LEDs	5V
Power connection digital aRGB LEDs	3-Pin JST + 3-Pin 5V
Color	transparent

Technical data pump

Material pump	synthetic material
Material pump cover	aluminium
Material axle	ceramics
Connections	4-Pin PWM | SATA
Rotational speed	2500 - 4500 RPM
Cable lengths	4-Pin PWM - 48cm | SATA - 48cm
Operating voltage	8-13V DC / 14W IP32
Starting voltage	12V DC
Maximum pumping head	4.25m
Maximum flow rate	340L/h
Maximum working temperature	60°C
Color	black

Download links

Manuals	13758_Alphacool_Apex_Pro_Skeleton_Carbon_Case_Manual(1).pdf 13758_Alphacool_Apex_Pro_Skeleton_Carbon_Case_Manual(2).pdf
Product pictures	13758_Alphacool_Apex_Pro_Skeleton_Carbon_Case_pics.zip
EU-DoC / CE / RoHS	Alphacool_EuDoc_CE_RoHS_13758.pdf

Packaging dimensions per unit

L x W x H	700 x 300 x 650 mm
Weight	13500 g

Other data

Certificates	CE, FC, RoHS
EAN	4250197137584
Customs code	84733080000

Article text

Unlimited freedom with the Alphacool Apex Pro Skeleton. Made from carbon rods and CNC-milled aluminum connectors, this case was specially developed to meet the requirements of water cooling systems. In order not to limit creativity, the Skeleton can be completely disassembled and customized according to your own wishes. The supplied Distro Plate including pre-assembled VPP Apex pump is designed exclusively for this case and enables numerous connection options.

A new level of creativity

The Alphacool Apex Pro Skeleton Carbon case is characterized by a design in which all components are screw-mounted, which allows for extensive modifiability. Equipped with three radiator mounts, two for 360mm and one for 120mm, this case offers ideal conditions for high-performance cooling systems. A GPU bracket and cable included in the scope of delivery allows the graphics card to be mounted vertically. The mainboard tray including cable box can also be positioned flexibly. The smoked glass side panel is another feature that opens up additional design options, as is the freely selectable positioning of the front panel. All in all, the skeleton case allows a great deal of freedom and creative ideas.

Exclusive distro plate

The included Distro Plate with 750ml reservoir offers connection options for CPU, GPU and radiators. The pre-installed Alphacool Apex pump has enough power for complex cooling loops. The connections of the Distro Plate are made of chrome-plated brass, as is usual with Alphacool. By embedding the connections in the acrylic, the problem of possible leaks due to cracking is avoided. Fitted with O-rings, the two connector parts lock together during installation and ensure maximum safety.

Apex Design

The Apex product line from Alphacool represents the highest level of perfection. First-class materials and innovative technologies guarantee a unique premium product. Consisting of real carbon and modular, CNC-milled aluminum connectors, the Apex Pro Skeleton case offers limitless creativity with a unique look. Inside each Skeleton case resides a truly unique creation waiting to be unleashed.

Figure (1)

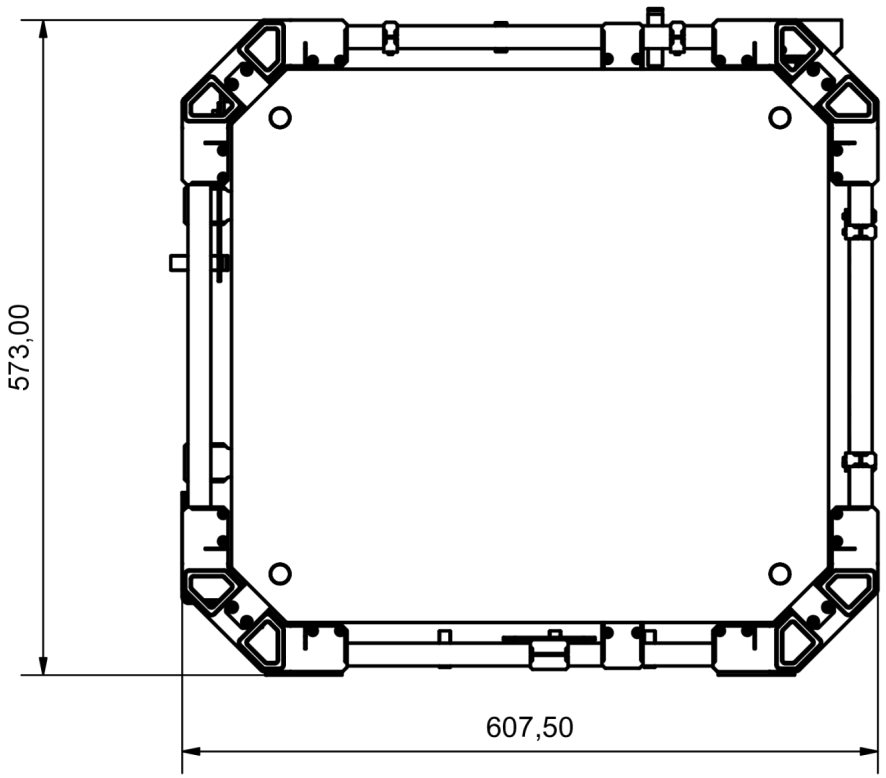

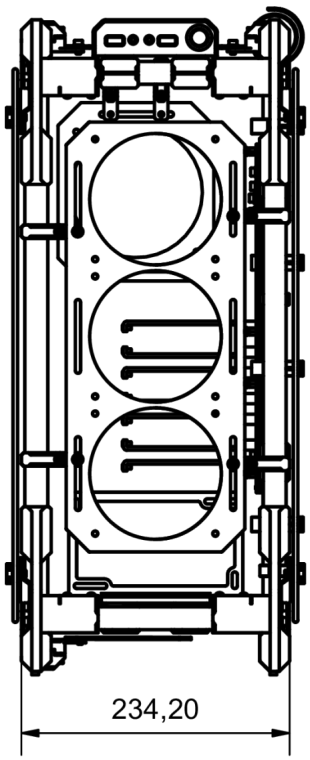

General tolerance: ± 0,25mm
Dimension in millimeter

Figure (2)

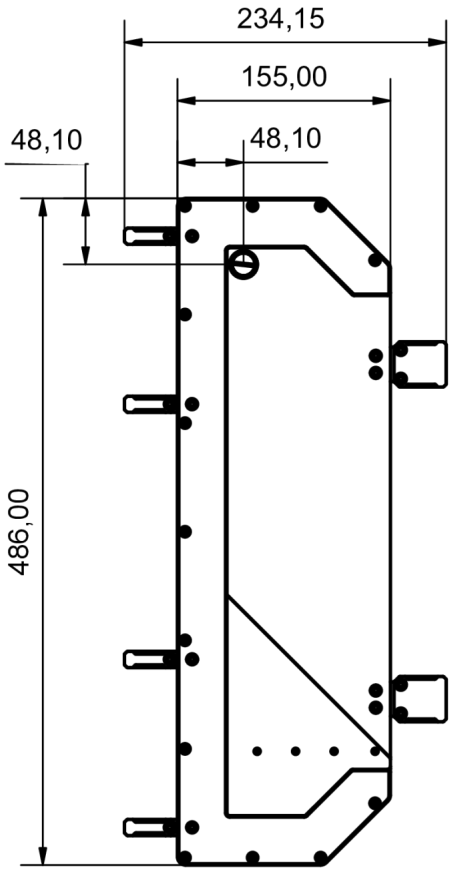

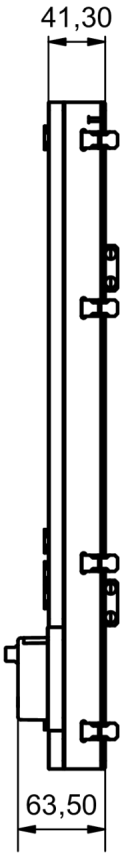

General tolerance: ± 0,25mm
Dimension in millimeter

Figure (3)

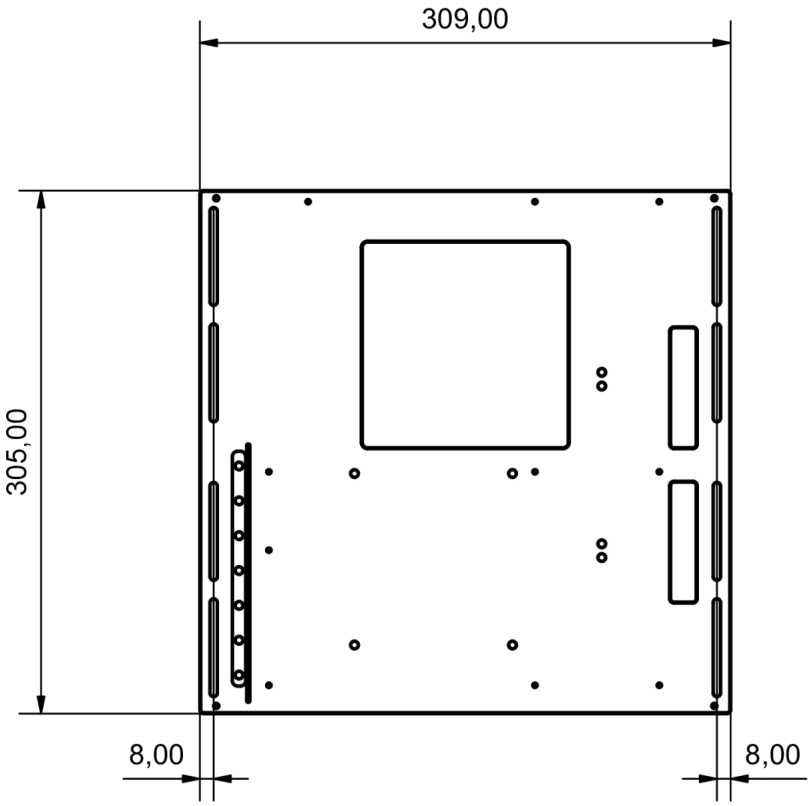

General tolerance: ± 0,25mm
Dimension in millimeter

Figure (4)

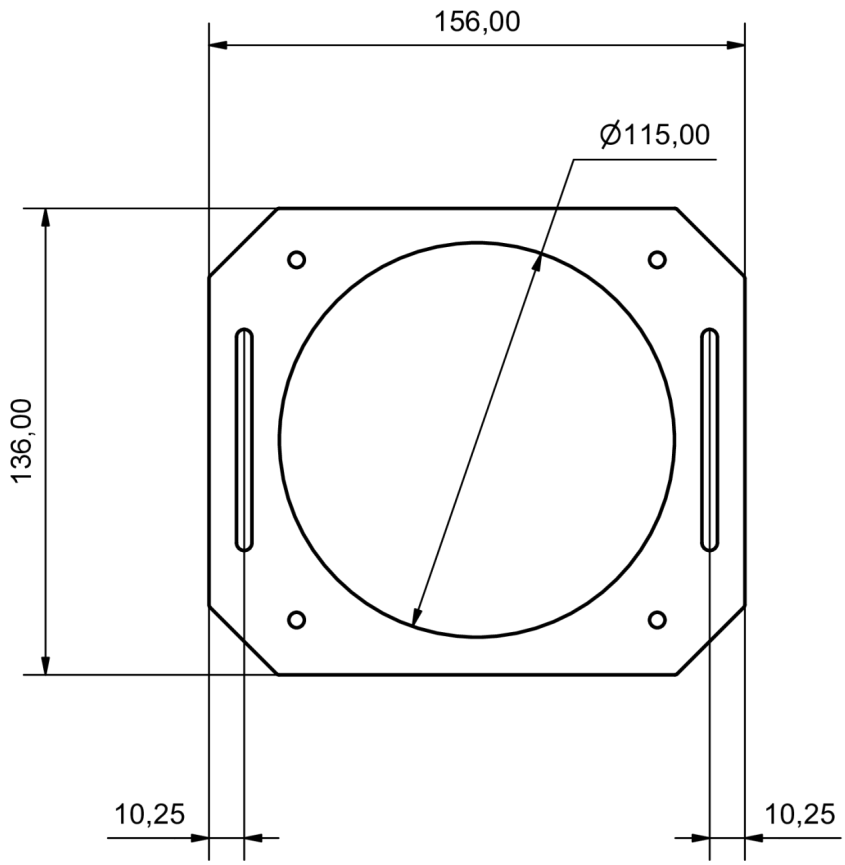

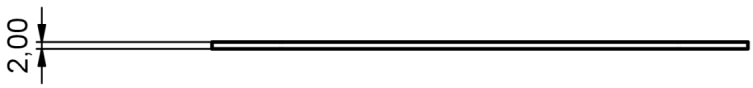

General tolerance: ± 0,25mm
Dimension in millimeter

Figure (5)

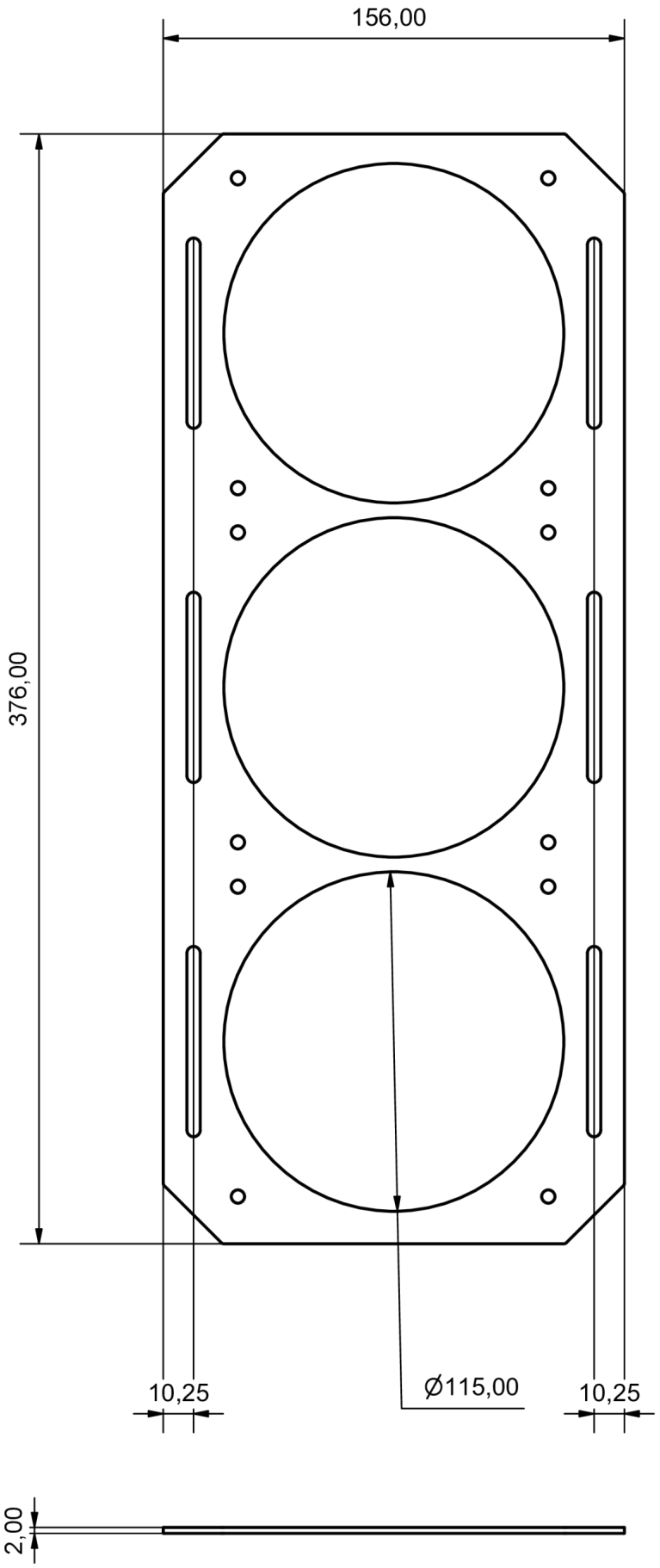

General tolerance: ± 0,25mm
Dimension in millimeter