V. 1.006 // 09.2026

Download Center

Alphacool Core 1 Black

Alphacool article number: 13443

Quick Info

Alphacool presents the Core 1, a new generation of CPU water cooling. The latest desktop processors are continuously becoming more powerful, but also produce more and more waste heat. The Core 1 reliably solves this problem with the help of its entirely new 3D-Jetplate, which is also used in industrial applications. The all-metal CPU water cooler not only impresses with its elegant appearance, but also features a new mounting system that simplifies installation.

- High performance Desktop CPU Cooler
- Reliable cooling with 3D-Jetplate
- Reworked Mounting-System
- Optimized for latest CPU Generations

Compatibility

AMD: AM4 / AM5

Intel: LGA 1700 / LGA 1851

Scope of delivery

1x Core 1 CPU Cooler
1x Thermal Grease
1x Putty tool
1x CPU Brackets AMD Set
4x Threaded bolt AMD
4x Screw sleeve
1x CPU Brackets INTEL Set
1x Core Backplate
4x Threaded bolt INTEL
4x EVA Washer

Technical data

Dimensions (L x W x H)	72 x 72 x 26,50mm
Material cooler	nickel plated copper
Material cooler top	Brass
Material threads	nickel plated Brass
Threads	2 x G1/4"
Fin thickness	0,4mm
Fin distance	0,4mm
Pressure tested	0,8 bar
Max working temperature	60°C
Weight	540g
Color	black

Download links

Manual	13443_Alphacool_Core_1_Black_Manual.pdf
Product pictures	13443_Alphacool_Core_1_Black_pics.zip
EU-DoC / CE / RoHS	Alphacool_EuDoc_CE_RoHS_13443.pdf

Packaging dimensions per unit

L x W x H	255 x 175 x 50 mm
Weight	970 g

Other data

Certificates	CE, FC, RoHS
EAN	4250197134439
Customs code	84195080900
Guarantee	5 years

Article text

Alphacool presents the Core 1, a new generation of CPU water cooling. The latest desktop processors are continuously becoming more powerful, but also produce more and more waste heat. The Core 1 reliably solves this problem with the help of its entirely new 3D-Jetplate, which is also used in industrial applications. The all-metal CPU water cooler not only impresses with its elegant appearance, but also features a new mounting system that simplifies installation.

The best of new and old

Alphacool brings the best of both worlds together with the Core 1. In addition to the new 3D-Jetplate, Alphacool returns to its roots by using a proven cross-slot technique to distribute coolant evenly across the redesigned cooler base. Inside the cooler, O-rings ensure precise water flow for effective cooling. The Core 1's housing is machined from a high-quality brass block and features nickel-plated connectors. The cooler's copper base, also nickel-plated, has been enlarged to ensure full coverage of large CPUs.

New Mounting System

The mounting system has also been revised. Compared to previous Alphacool models, it requires fewer screws. First, the pre-assembly of the backplate (Intel) is done with four spacers. After that, the thermal paste is applied to the CPU. Then, the matching mounting frame is put on the CPU cooler and fastened with four nuts on the spacers.

Core Design

The functional and elegant design is a key element of Alphacool's Core series. The nickel-plated connectors and the discreet contour line stand out from the high-quality brass housing. The rounded corners add the perfect touch to the overall look. The Core 1 is available in various color designs, as well as in discreetly illuminated aRGB Aurora models.

Figure (1)

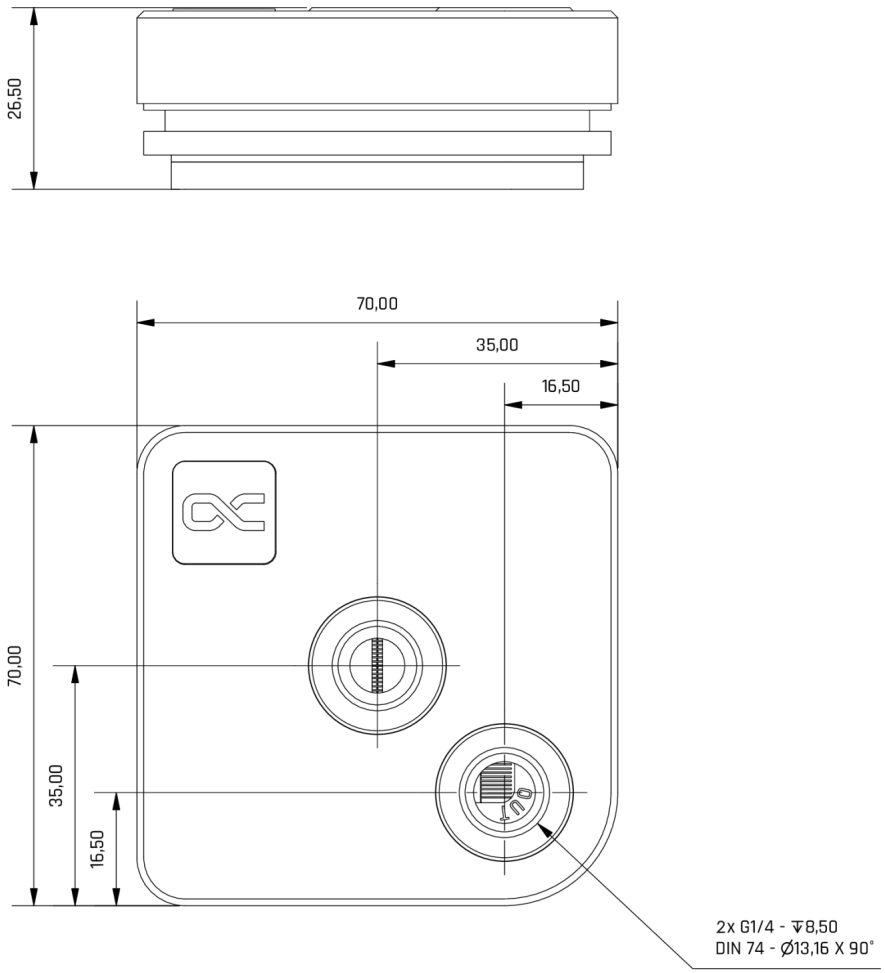

General tolerance: ± 0,25mm
Dimension in millimeter

Figure (2)

Mechanical properties:

LED quantity and length	18pc. / L =0mm	Minimum temperature t min =	-20°C
LED Voltage V =	5 V	Working temperature t =	20°C
LED Ampere A =	0,06 A	Maximum temperature t max =	60°C
LED Power W =	5,5 W	Working pressure p =	0,0 - 0,8Bar
		Maximum pressure p max =	0,8Bar

Maximum torque of G thread M max = G 1/4 = 1,00Nm
ISO 228-1 Parallel Whitworth pipe thread BSPP (GB)

Maximum torque of M thread M max =
DIN 13-1 Metric ISO standard thread
M2X0,4 = 0,13Nm
M2,5X0,45 = 0,27Nm
M3X0,5 = 0,48Nm
M4X0,7 = 1,12Nm

Max. torque of UNC thread M max = #6-32 = 1,1Nm
Unified Thread Standard (UTS)

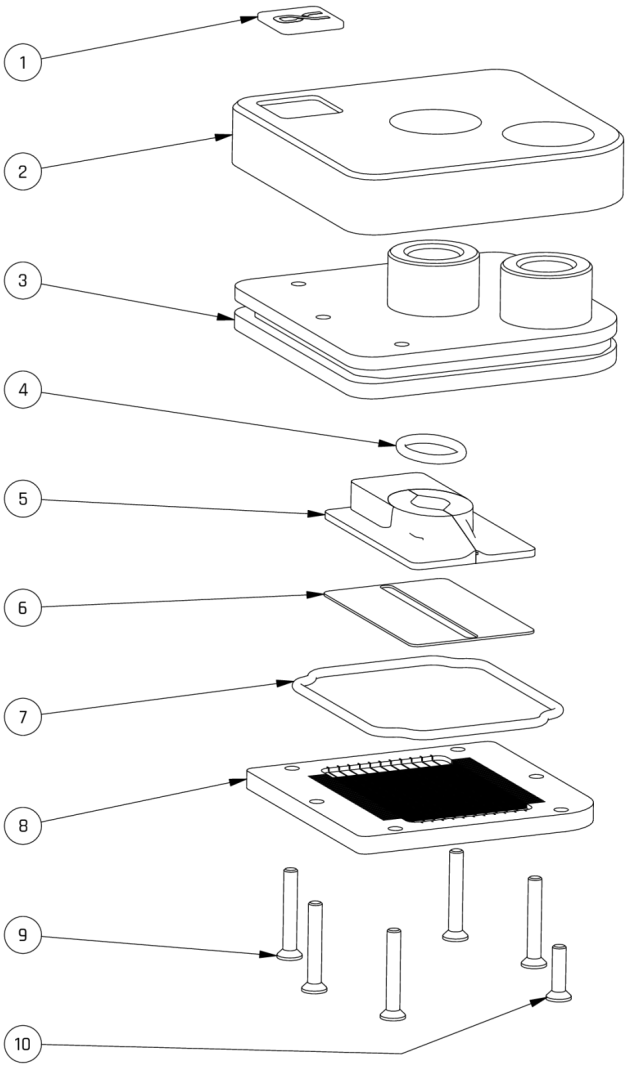

1023311 13443
Alphacool Core 1 Black

Parts List

Item	Quan-tity	Description	Material
1	1	1025249 10221 1 - Alphacool Logo Batch 15x15mm 2023 Batch	PA MACM12 + PA 12, GHLT, 18-020
2	1	Core 1 Cover black	Aluminium 6061
3	1	Core 1 Brass Base	Brass CuZn39
4	1	Core 1 O-Ring 13 x 2 NBR 70	NBR Shore 70
5	1	Core 1 Jet with rubber	Nylon 66
6	1	Core 1 Jet sealing	VMQ Shore A 70
7	1	Core 1 ORing 55 x 2 NBR 70	NBR Shore 70
8	1	Core 1 Copperplate	Cu-HCP
9	5	Core 1 ISO 10642 - M3 x 20	Stainless steel AISI 304
10	1	Core 1 ISO 10642 - M3 x 12	Stainless steel AISI 304