V. 1.001 // 09.2026

Download Center

Alphacool ES Orbiter Filling Station

Alphacool article number: 13093

Quick Info

The ES Orbiter Filling Station from Alphacool allows for easy and effective filling of water cooling systems. With the help of the two powerful pumps, the system to be filled is quickly vented. A high-performance filter ensures that the coolant is cleaned, making the ES Filling Station also ideal for cleaning cooling loops.

- Two pumps for quick venting
- Filter also reliably cleans existing cooling systems
- Easy filling due to large filling port
- Illuminated inspection window

Scope of delivery

1x ES Orbiter Filling Station
1x TPV Tube 12,7/7,6mm
2x TPV Fitting 12,7/7,6mm
2x TPV QDC Kit Push-In Version
1x Power Supply 120cm
1x Power Plug 50cm

We assume no responsibility for any typing errors. Alphacool International GmbH, Marienberger Strasse 1, 38122 Braunschweig Tel: (+49)0531 288 7400 Supportmail: info@alphacool.com

Technical data

Dimensions (L x W x H)	415,50 x 226,40 x 188,10mm
Material: Case	Metal
Material: Reservoir	Acrylic
Material: Tubes	TPV (EPDM)
Approved liquids	water, water/glycol mixture
Voltage	12V DC
Power consumption	39W
Approved water pressure	0,8bar
Max. pumping height	3,125m
Rate of flow	350l/h
Permitted operating temperature (industrial applications)	75°C
Water connections	2x G1/4“
Diameter filling port	G1“
Volume reservoir	approx. 4500ml
Color	black

Download links

Manual	13093_Alphacool_ES_Orbiter_Filling_Station_Manual.pdf
Safety data sheet	13093_Alphacool_ES_Orbiter_Filling_Station_SDS.pdf
Product pictures	13093_Alphacool_ES_Orbiter_Filling_Station_pics.zip
EU-DoC / CE / RoHS	Alphacool_EuDoc_CE_RoHS_13093.pdf

Packaging dimensions per unit

L x W x H	460 x 310 x 300 mm
Weight	10430 g

Other data

Certificates	CE, FC, RoHS
EAN	4250197130936
Customs code	84195080900

Article text

The ES Orbiter Filling Station from Alphacool allows for easy and effective filling of water cooling systems. With the help of the two powerful pumps, the system to be filled is quickly vented. A high-performance filter ensures that the coolant is cleaned, making the ES Filling Station also ideal for cleaning cooling loops.

Efficient venting and filtering

The two built-in pumps in the ES Filling Station not only ensure redundancy, but also enable fast and reliable venting of the system to be filled. The installed filter ensures that no impurities enter the cooling system. Thanks to the filter, the Filling Station is also ideal for cleaning existing cooling circuits.

Easy handling

Filling the Alphacool ES Filling Station is effortless via the slightly raised G1 filling port. The illuminated inspection window allows easy monitoring of the fill level at any time and even in poorly lit environments. The integrated reservoir has a capacity of approx. 4500 ml. In addition, the Filling Station has a maintenance door for carrying out work such as changing filters.

Figure

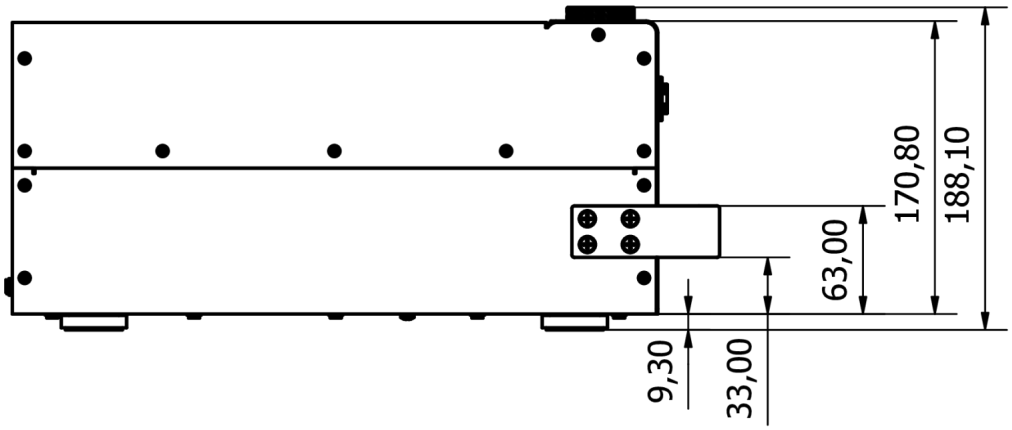

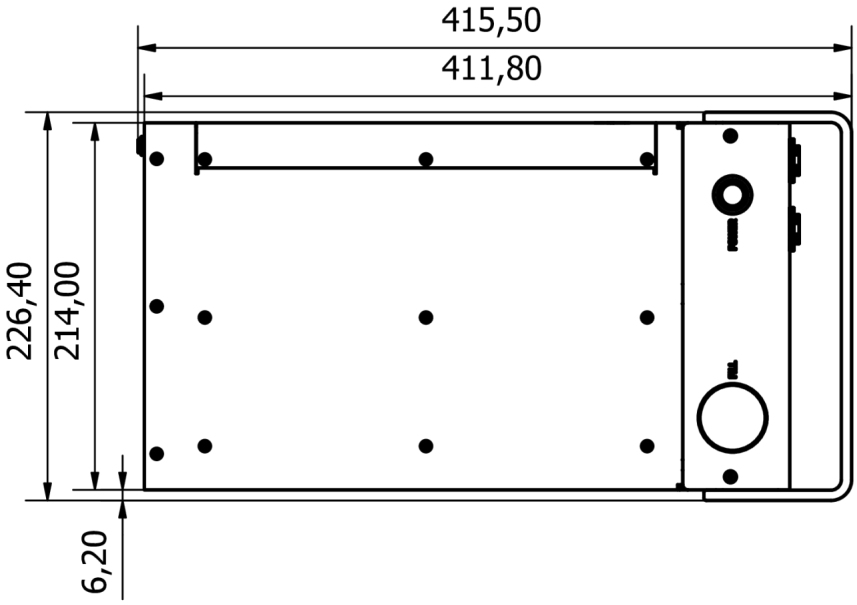

General tolerance: ± 0,25mm
Dimension in millimeter