Download Center

Alphacool HDX Apex Acetal M.2 2280 SSD Cooler

Alphacool article number: 11968

Quick Info

SSDs in M.2 format are becoming increasingly popular. The high transfer rates and extremely low access times allow faster and more effective working or playing on the PC. Alphacool offers the HDX Apex Acetal M.2 2280 SSD cooler so that the full performance of the M.2 2280 SSD can be used permanently. It is a useful addition to any water circuit and ensures that the M.2 SSD memory can release its full potential.

- Nickel-plated copper cooler base for optimal thermal conductivity
- Avoids overheating of the SSD and allows best possible performance
- Discreetly elegant design thanks to material mix of copper (base) and acetal (housing)

Compatibility

- M.2 2280 SSD

Scope of delivery

1x Alphacool HDX Apex Acetal M.2 2280 SSD Cooler, black
2x 20 x 68 x 0,5mm Thermal Pad
1x 20 x 68 x 1,5mm Thermal Pad
1x clip

Technical data cooler

L x W x H	67.99 x 25.6 x 16.8 mm
Material cooler	nickle-plated copper
Material cooler top	acetal
Material clip	synthetic material
Threads	2x G 1/4
Thickness cooler bottom	1.6 mm
Thermal conductivity thermal pads	3 W/(m·K)
Pressure tested	0.8 bar
Maximum working temperature	60 °C
Weight	43 g
Color	black

Download links

Manual	11968_Alphacool_HDX_Apex_Acetal_M.2_2280_SSD_Cooler_Manual.pdf
Product pictures	11968_Alphacool_HDX_Apex_Acetal_M.2_2280_SSD_Cooler_pics.zip
EU-DoC / CE / RoHS	Alphacool_EuDoc_CE_RoHS_11968.pdf

Packaging dimensions per unit

L x W x H	100 x 70 x 35 mm
Weight	86 g

Other data

Certificates	CE, FC, ROHS
EAN	4250197119689
Customs code	84195080900

Article text

SSDs in M.2 format are becoming increasingly popular. The high transfer rates and extremely low access times allow faster and more effective working or playing on the PC. Alphacool offers the HDX Apex Acetal M.2 2280 SSD cooler so that the full performance of the M.2 2280 SSD can be used permanently. It is a useful addition to any water circuit and ensures that the M.2 SSD memory can release its full potential.

Why an active M.2 cooler?

Due to their design, M.2 SSDs are only able to deliver their maximum performance for a short time. The controller chip heats up extremely quickly and begins to throttle the performance of the M.2 SSD at an early stage in order to avoid overheating. Independent tests have shown that during write operations, the transfer rates of uncooled M.2 SSDs can drop after just 30 seconds. With read processes, the throttling usually occurs a few seconds later. With the Alphacool HDX Apex Acetal M.2 2280 SSD cooler, the maximum performance of the SSD can be used over a significantly longer period of time. This is clearly noticeable during longer read and write processes.

Mounting

The HDX Apex Acetal cooler is compatible with M.2 2280 SSDs that are mounted on one or both sides. If the PCB is populated with memory chips on both sides, the 0.5mm heat conduction pad is used on both sides. If memory chips are only installed on one side, then the 1.5mm heat conduction pad is used on the side without chips. Once the top and bottom of the SSD have been fitted with thermal pads, the SSD memory is pushed into the retaining clip and mounted under the cooler. The installation on the mainboard is then carried out as usual. The cooler can now be integrated into the water circuit using the existing G1/4" connections.

Copper instead of aluminium!

Alphacool only uses copper in its water coolers. The reason is simple: copper has almost twice the thermal conductivity of aluminium and is therefore the obviously better choice of material for a water cooler.
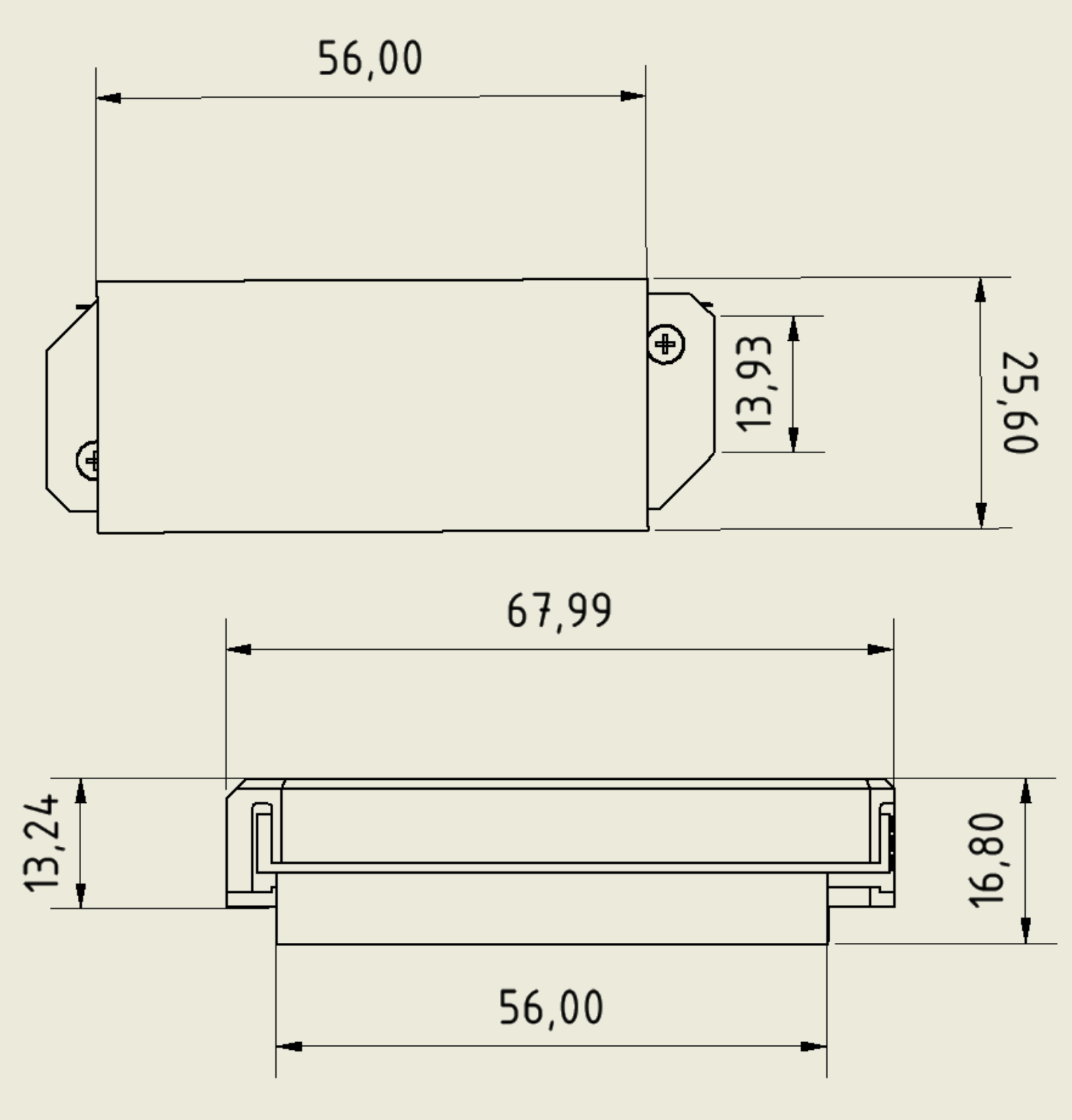
Figure